Installation instructions

Multi-temperature wine cabinet

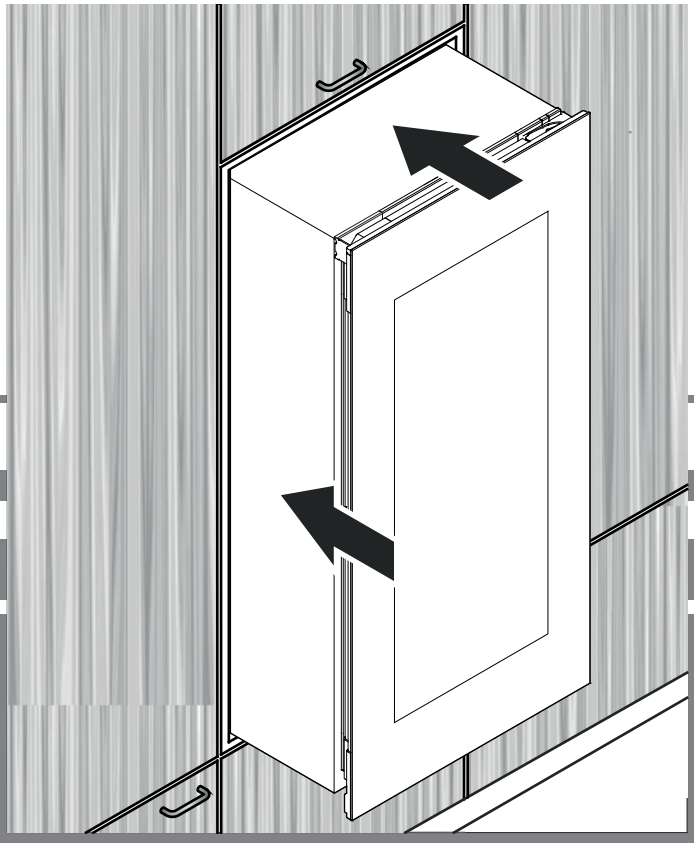

7085 665-03

EWTgb/gw 1683 / 2383 / 3583

LIEBHERR

Vinidor

Content

Scope of delivery 14
Appliance dimensions 14
Transporting the appliance 15
Installation dimensions 16
Appliance venting 16
Changing over door hinges 17
Installing the appliance 20
Adjusting the door 24

Scope of delivery

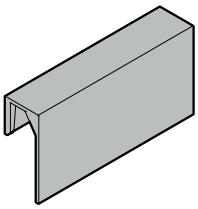

Labels
2 pc. - EWT 1683
4 pc. - EWT 2383
8 pc. - EWT 3583

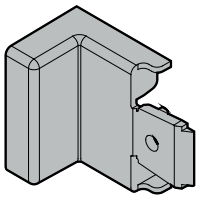

Cover

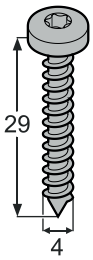

2 pc.

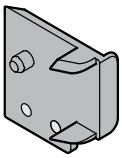

Spacer

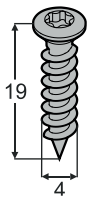

5 pc.

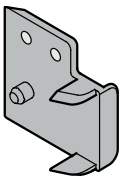

Spacer

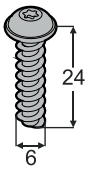

2 pc.

2 pc.

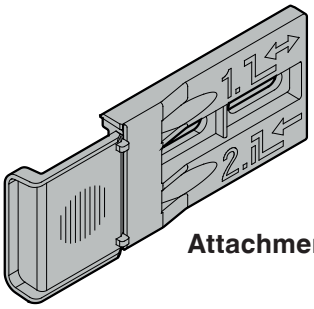

Attachment bracket

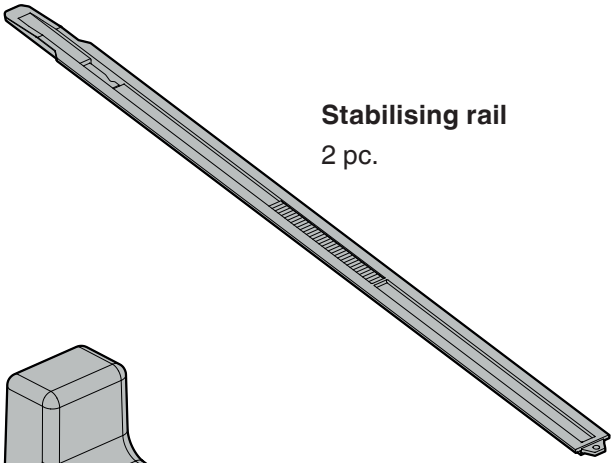

Stabilising rail
2 pc.

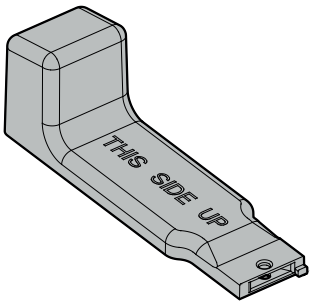

Stabilising rail handle

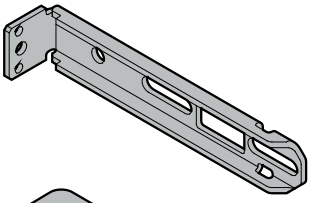

Attachment bracket

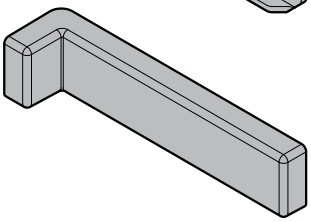

Cover

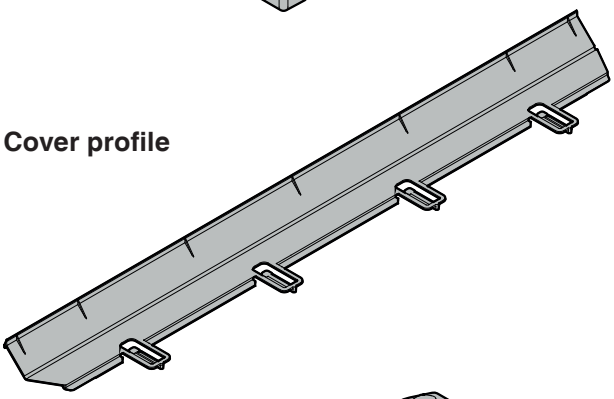

Cover profile

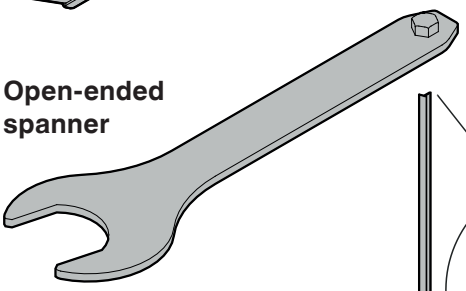

Open-ended spanner

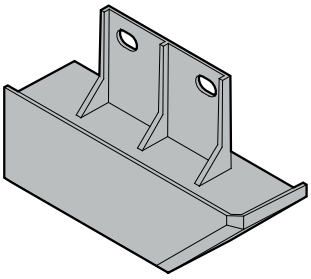

Cover

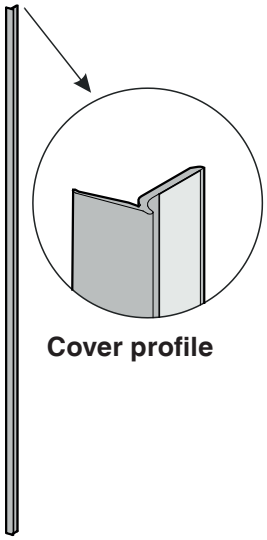

Cover profile

Appliance dimensions

A	510 mm
B	EWT 16.. - 906 mm EWT 23.. - 1233 mm EWT 35.. - 1816 mm
C	572 mm
D	EWT 16.. - 872 mm EWT 23.. - 1218 mm EWT 35.. - 1770 mm
E	595 mm
F	557 mm
G	254 mm
H	1100 mm
I	115°
J	EWT 16.. - 26.5 mm EWT 23.. - 7.5 mm EWT 35.. - 27 mm
K	EWT 16.. - 7.5 mm EWT 23.. - 7.5 mm EWT 35.. - 19 mm

Side view

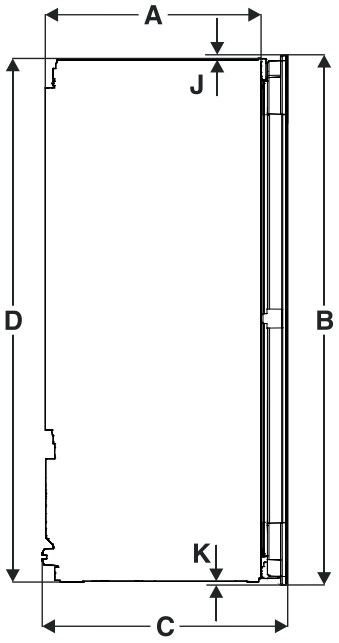

Front view

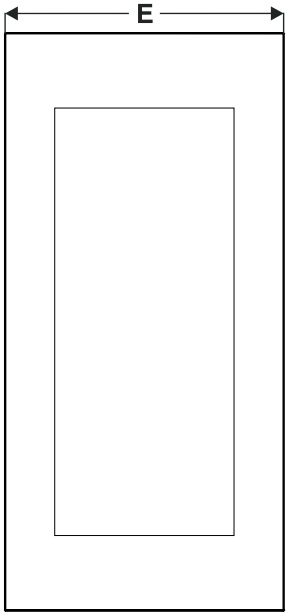

View from above

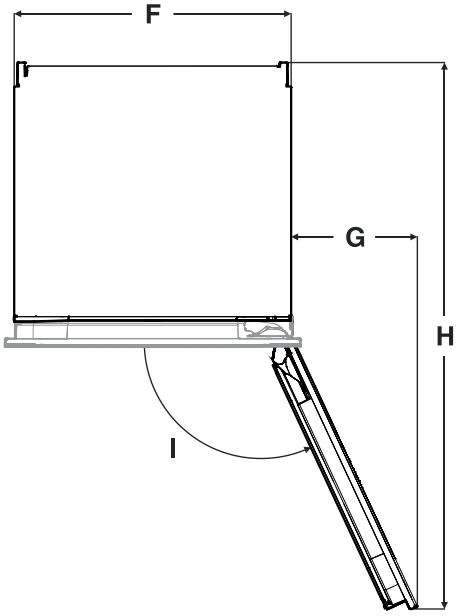

Transporting the appliance

⚠ CAUTION

Danger of injury or damage as a result of incorrect transport!

- Transport the appliance in a packed condition.
- Transport the appliance upright.
- Do not transport the appliance without assistance.

⚠ WARNING!

An appliance which has not been built in can topple over!

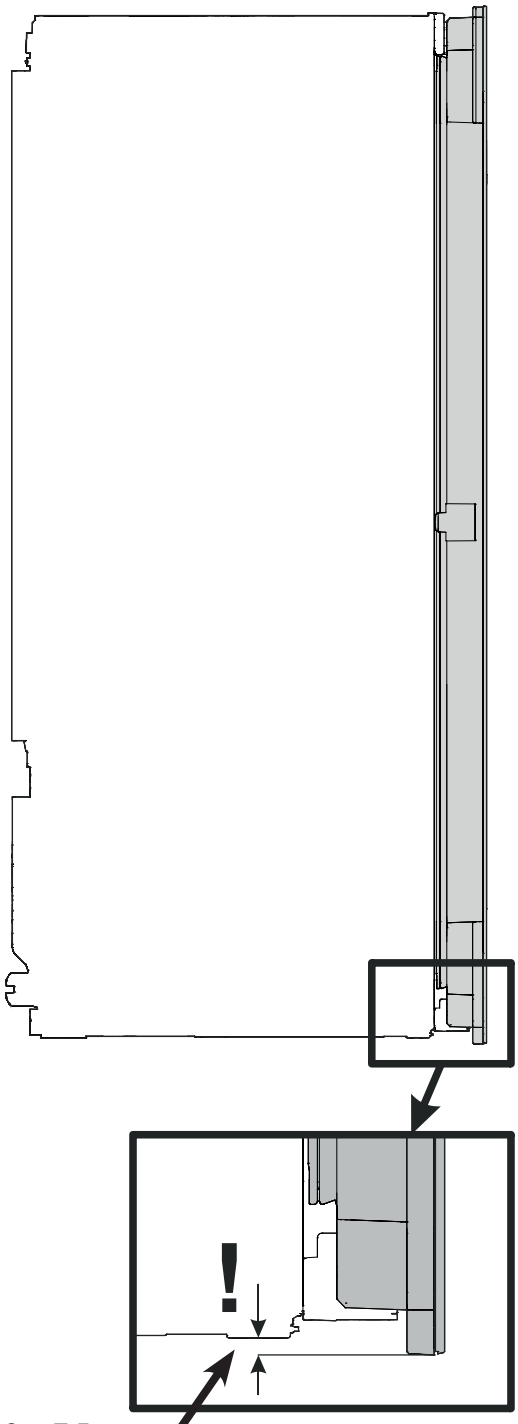

EWT 16.. - 7,5 mm
EWT 23.. - 7,5 mm
EWT 35.. - 19 mm

Installation dimensions

Important note

In order to avoid any problems when installing the appliance and to avoid damage to the appliance, the following conditions must be complied with.

The kitchen unit must be aligned horizontally and vertically!

Minimum wall thickness of the body of the unit = 16 mm.

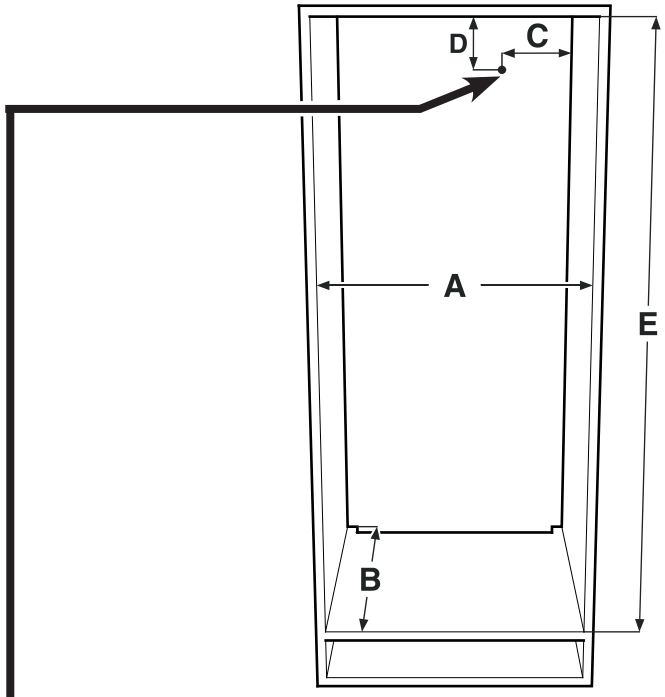

A	560 mm - 570 mm
B	min. 550 mm (recommended 560 mm)
C	70 mm
D	30 mm
E	EWT 16.. - 874-890 mm EWT 23.. - 1220-1236 mm EWT 35.. - 1772-1788 mm

In this area, the mains power cable comes out of the appliance rear.

Free length of the mains power cable:

EWT 16..: 2000 mm
EWT 23..: 2000 mm
EWT 35..: 2800 mm

Choose the position of the socket considering these specifications.

The socket must not be situated behind the appliance and must be easily accessible.

Appliance venting

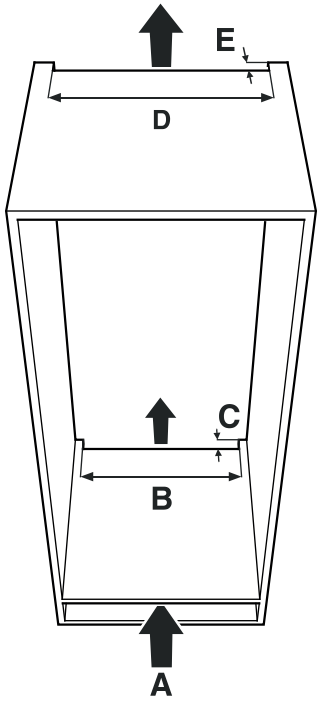

Important note

The clear ventilation cross-section must be at least 200 cm² from the lower ventilation opening right to the upper one.

A	min. 200 cm²
B	min. 500 mm
C	min. 40 mm
D	min. 500 mm
E	min. 40 mm

Types of air outlet

① Directly above the appliance

② Above the top unit

③ From the front of the top unit with decor grille

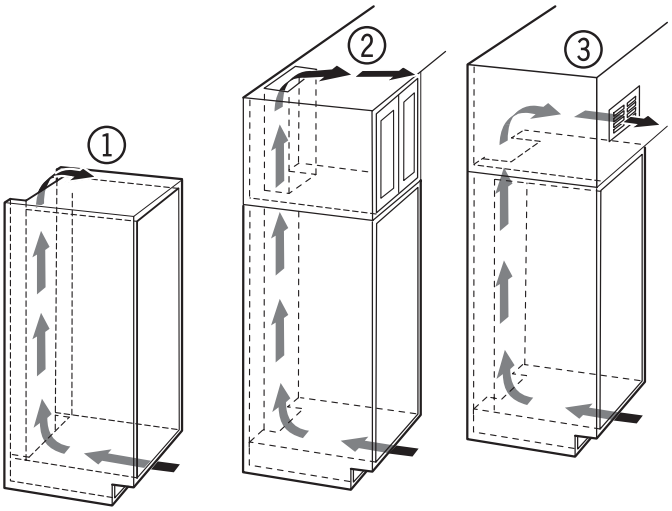

Important note

When using decor grilles, it must be taken into account that the clear ventilation cross-section corresponds to the sum of the individual openings in the grille.

A cut-out section of merely 200 cm² for installing the ventilation grille is thus not sufficient.

Changing over door hinges

Door hinges should only be changed by a trained expert.

Changing the door hinges must be done by two people.

⚠ WARNING!

High door weight.
Danger of injury and damage to property.
Only complete the modification work if you can lift a weight of 35 kg.

⚠ WARNING!

Risk of injury due to the door dropping out! If the fastening parts are not screwed into place firmly enough, the door may drop out. This may lead to severe injuries. What is more, the door may not close and therefore the appliance may fail to cool properly.

1. Remove covers.

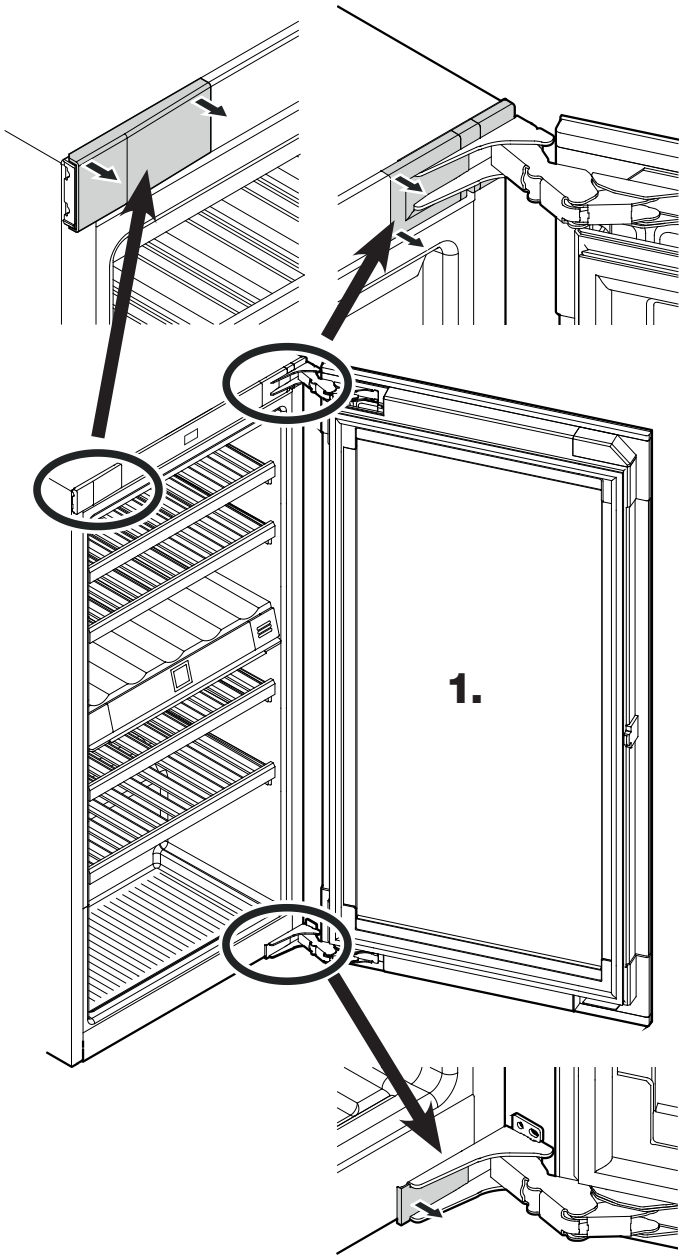

2. Remove the transportation safety component.

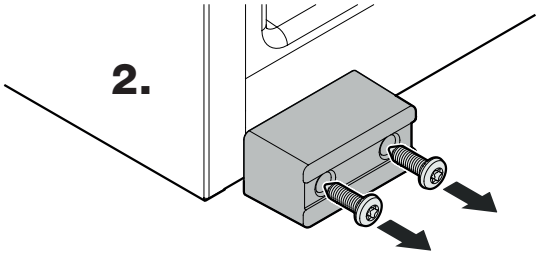

3. Remove seal.

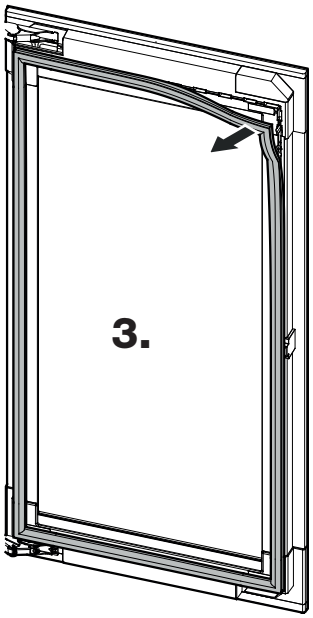

4. Remove cover.

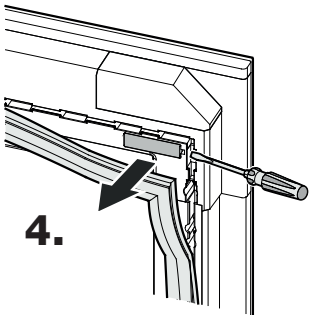

5. Remove cover.

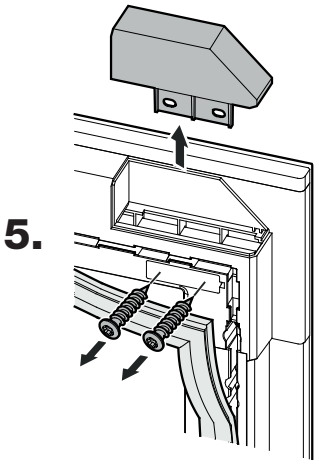

6. Remove seal.

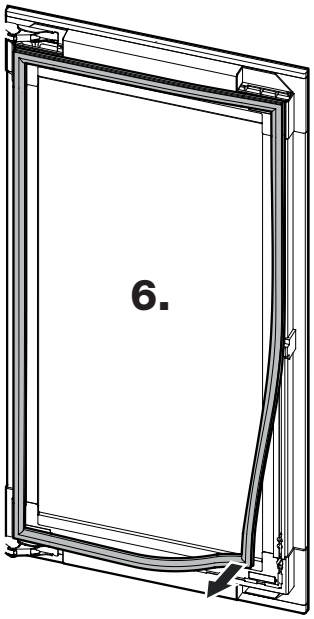

7. Remove cover.

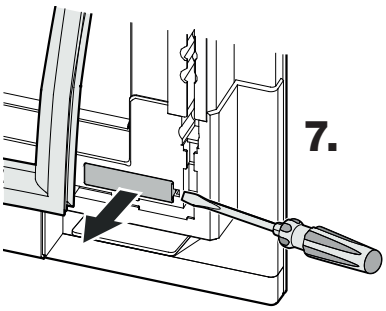

8. Remove the transportation safety component.

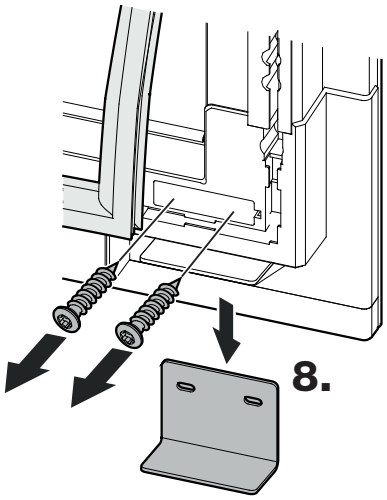

9. Remove the door.

The door must now be held secure by somebody.

Carefully place the door on a soft surface.

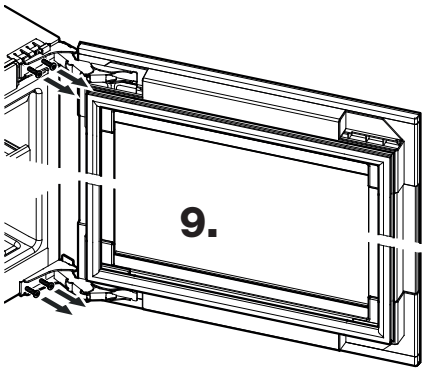

⚠ **CAUTION**

Risk of injury if hinges fold!

- Leave hinges open.

10. Remove the upper retaining bracket and transfer to the opposite side.

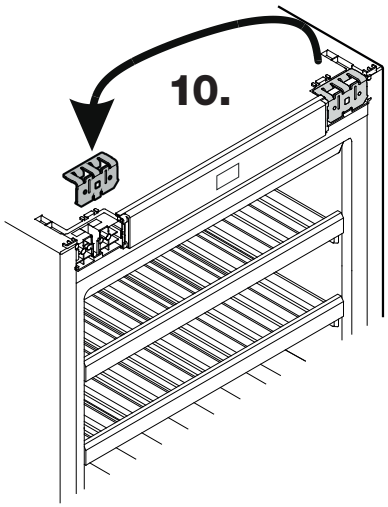

11. Transfer the stop to the opposite side.

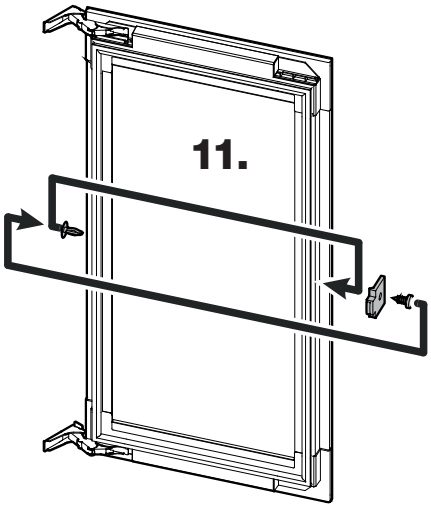

12. Remove seal.

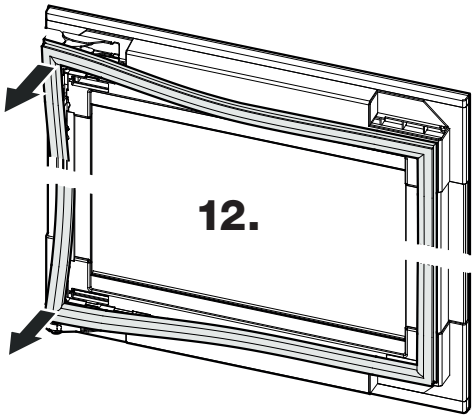

13. Remove covers.

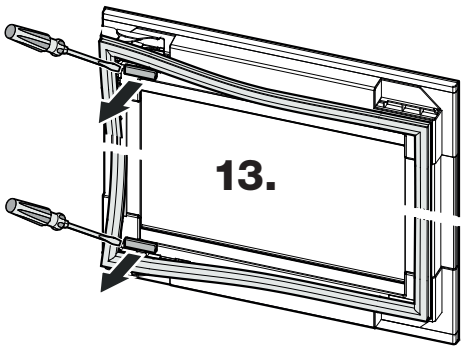

14. Unscrew hinges.

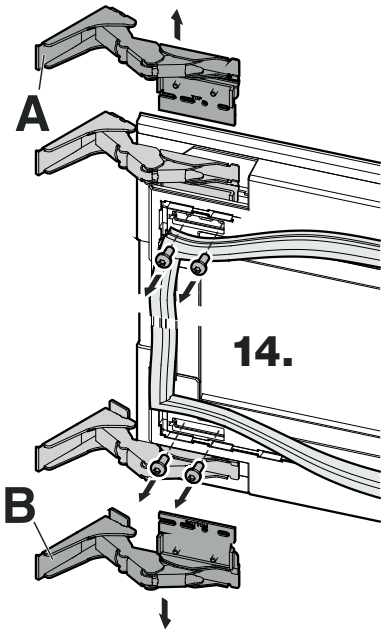

15. Unscrew the attachment plates from the hinges and resecure them to the other relevant hinge (the "Top" attachment plate must remain at the top + the "Bottom" attachment plate at the bottom). Re-fit the hinges on the opposite side of the door at diagonals to the original position.

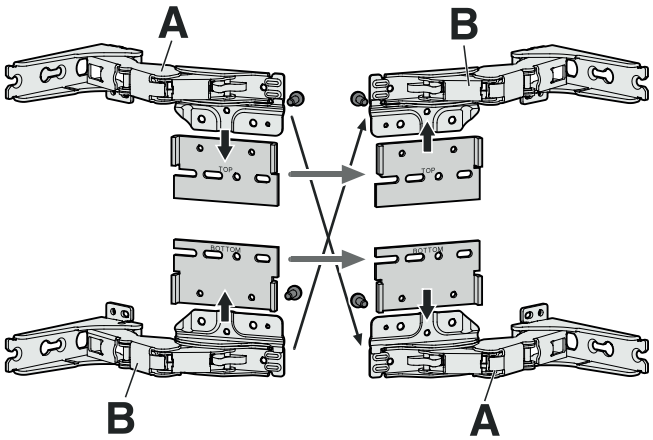

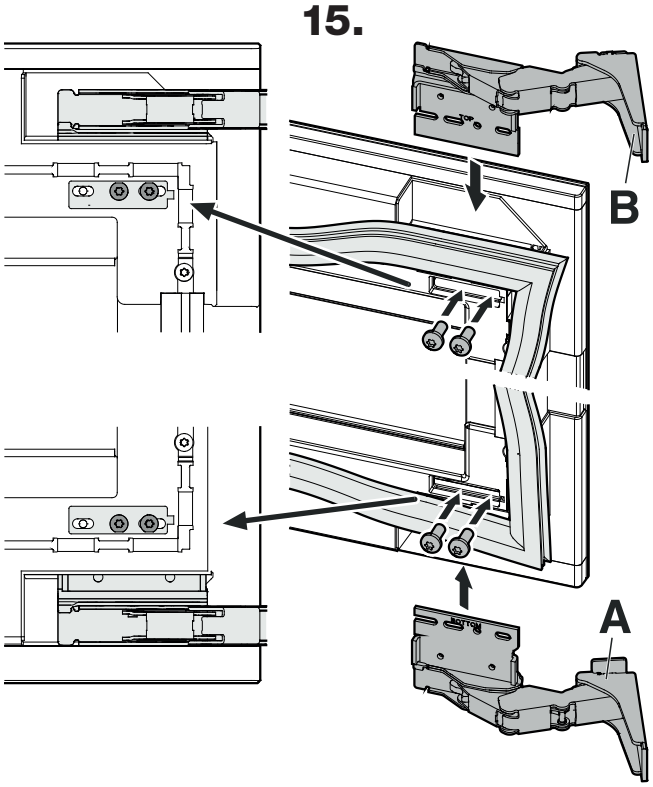

16. Screw on covers.

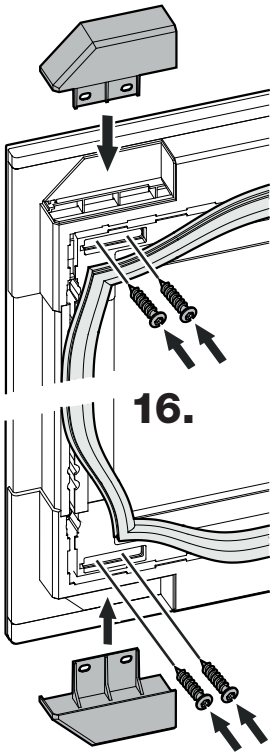

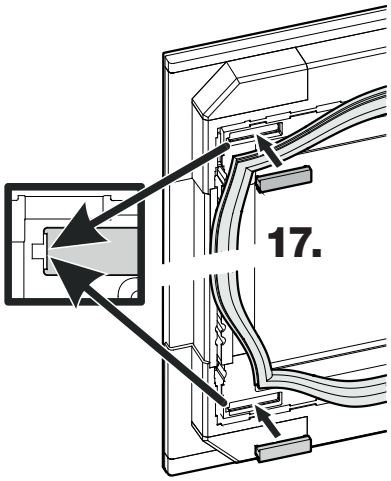

17. Fit the covers.

18. Fit seal.

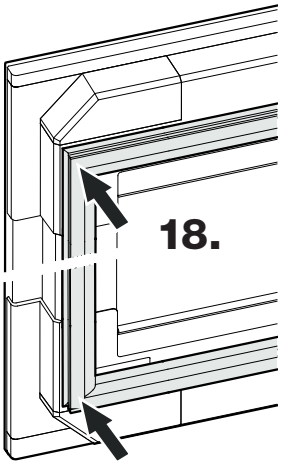

19. Fit the covers.

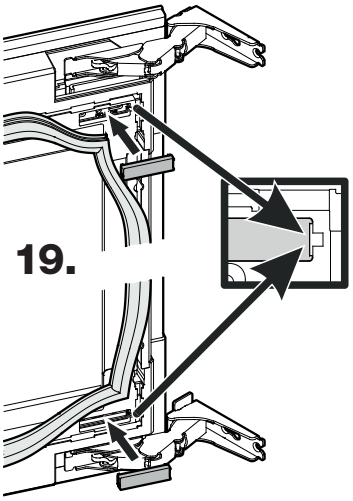

20. Fit seal.

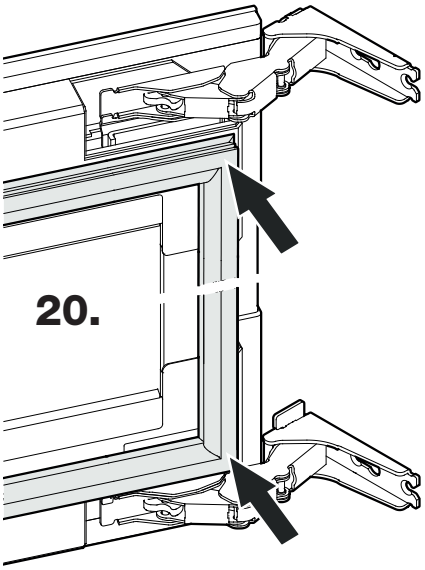

21. Fit the door on the appliance.

Notice
The door must now be held secure by somebody.

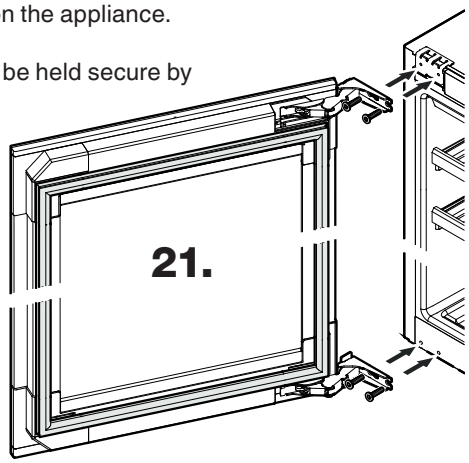

22. Fit covers and click into place.

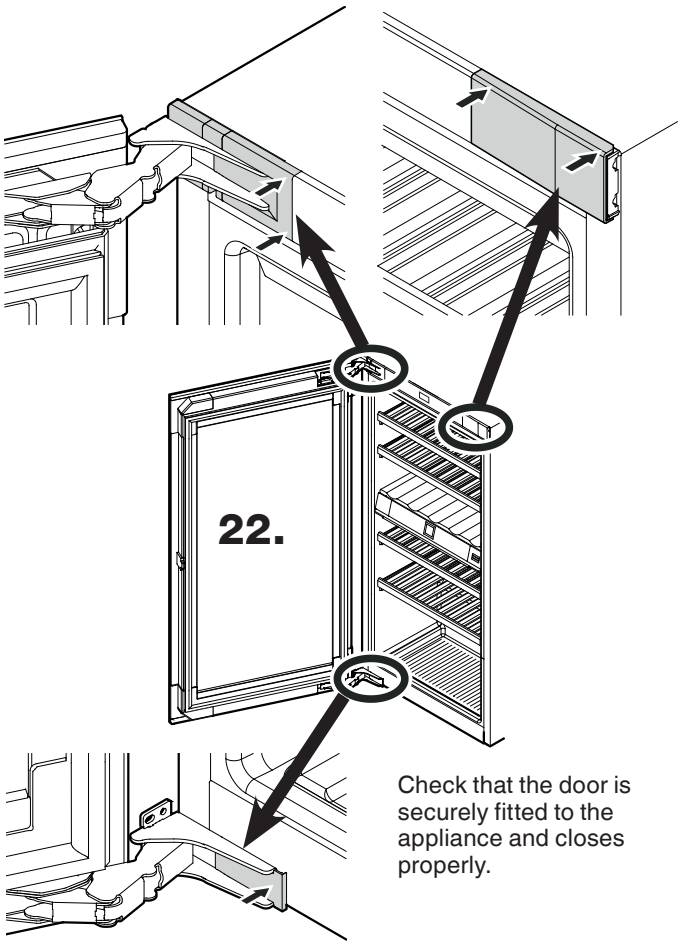

Check that the door is securely fitted to the appliance and closes properly.

Installing the appliance

The installation work should only be carried out by trained personnel.

Two people are required for the installation work.

Note
Check the installation dimensions before installation.
The intermediate panel and side wall of the kitchen unit must be perpendicular to each other.

⚠ WARNING!

Fire hazard due to dampness!

If live parts or the mains power cable become damp this may cause short circuits.

- The appliance is designed for use in enclosed areas. Do not operate the appliance outdoors or in areas where it is exposed to splash water or damp conditions.

- Only use the appliance when it is installed.

1. EWT 3583 - Remove the transportation safety component.

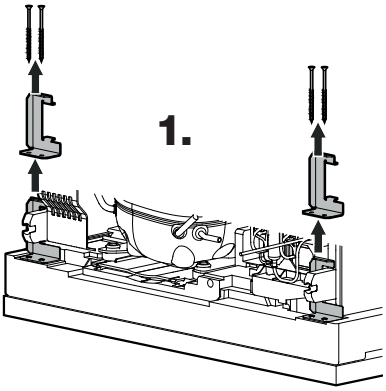

2. Route the mains cable towards the socket.

⚠ WARNING!

Fire hazard from short-circuiting!

- When pushing the appliance into the recess, take care not to crush, jam or damage the mains power cable.

- Do not operate the appliance with a defective mains power cable.

3. Slide the appliance two-thirds of the way into the kitchen unit.
When sliding in the appliance, make sure that the mains cable is not damaged.

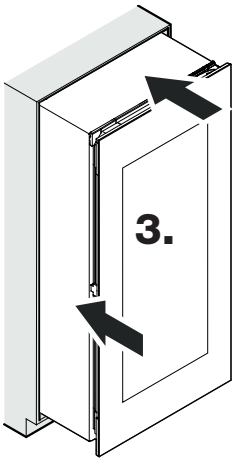

4. Screw in the adjustable feet as far as they will go.

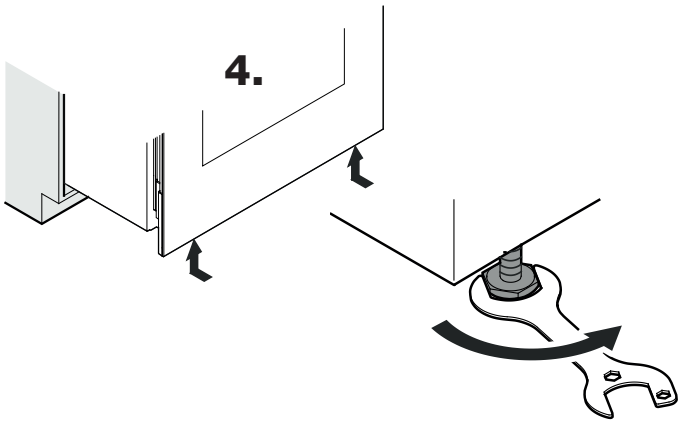

5. Fit cover profile.

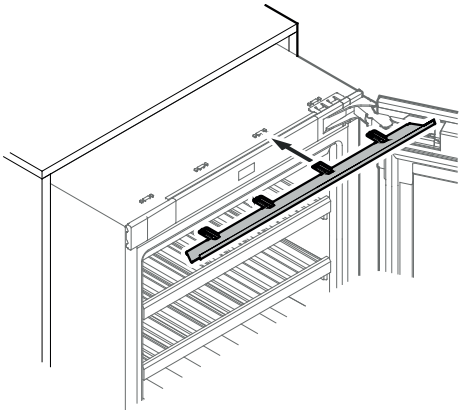

On appliances with hinges on the left

On appliances with hinges on the right

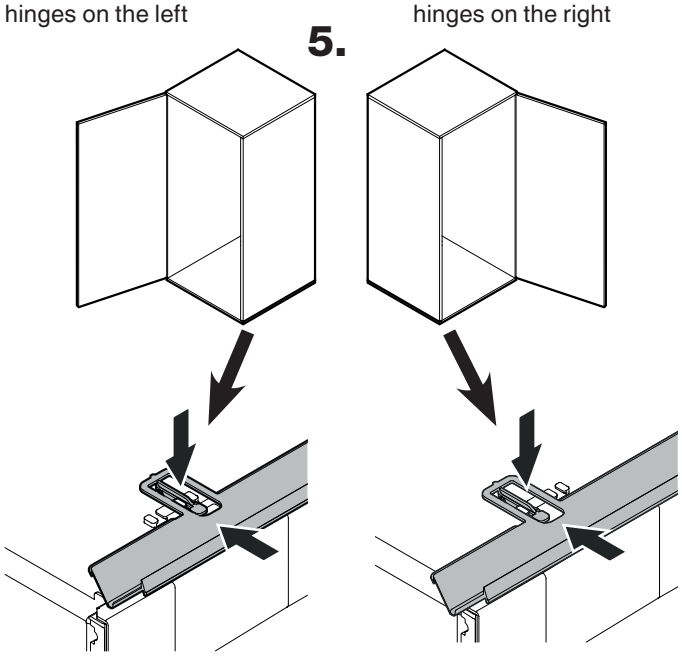

6. Remove the transportation safety component.

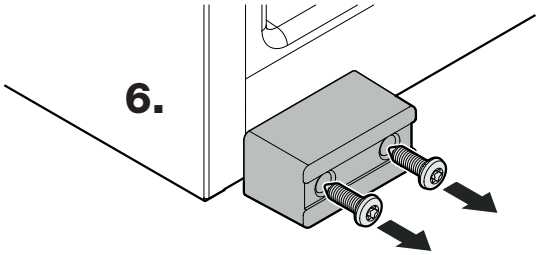

7. Only if the wall thickness is less than 19 mm:
Fit the spacers.

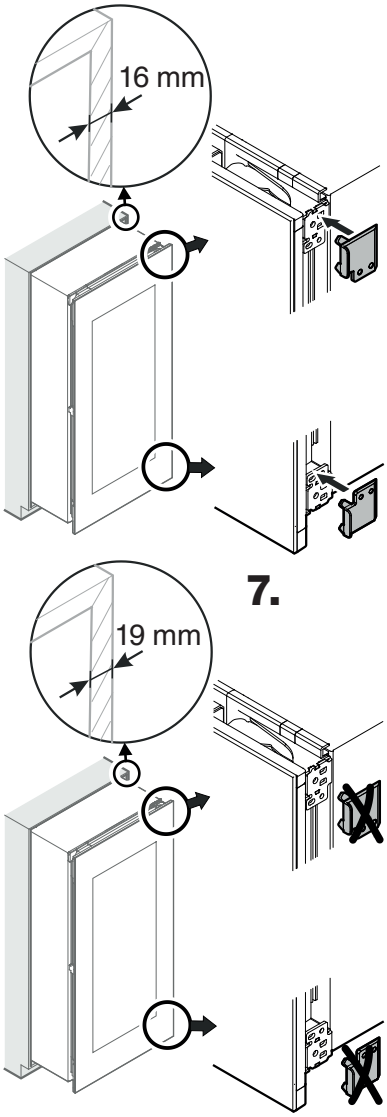

8. Remove cover.

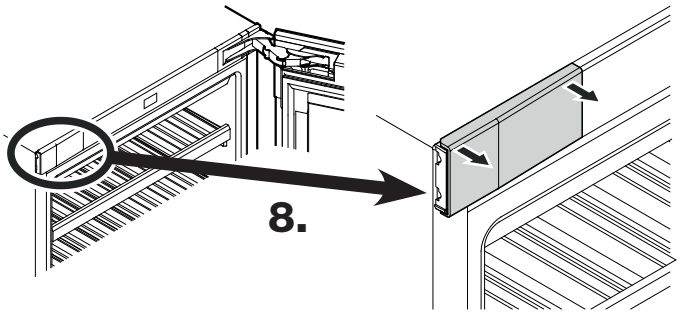

9. Screw on the attachment bracket.

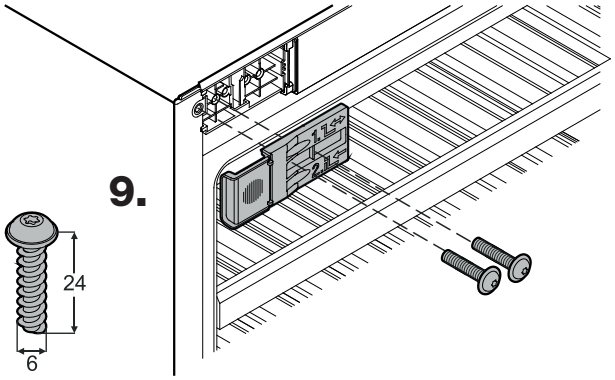

10. Screw on the attachment bracket.

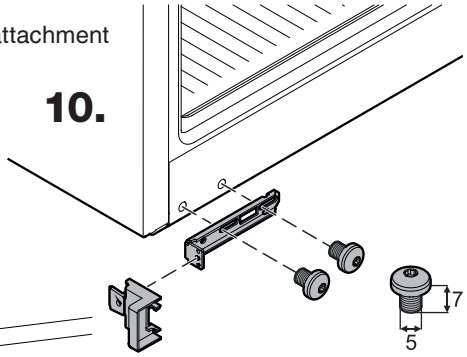

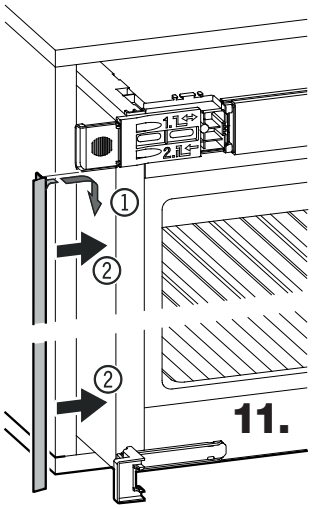

11. Fit cover profile.

12. Remove edge protection.

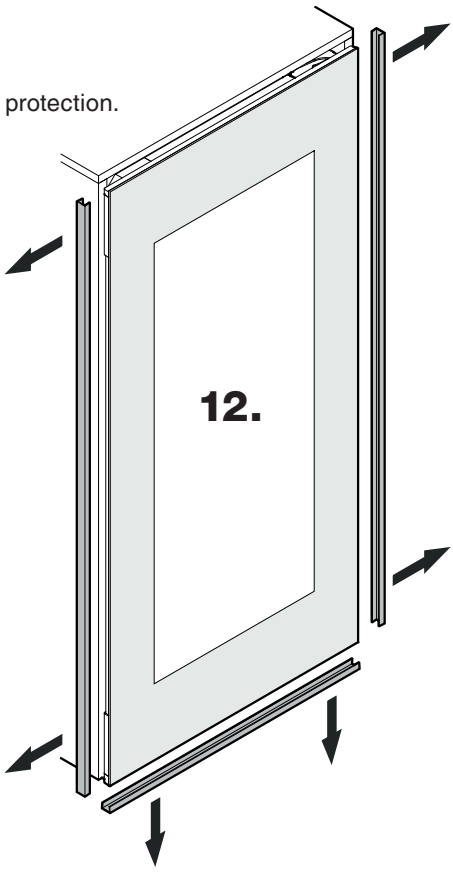

13. Slide the appliance fully into the recess.
Check that the distance is identical all the way round.

- Undo the screws ①.
- Slide bracket towards the unit wall.
- Tighten the screws ①.

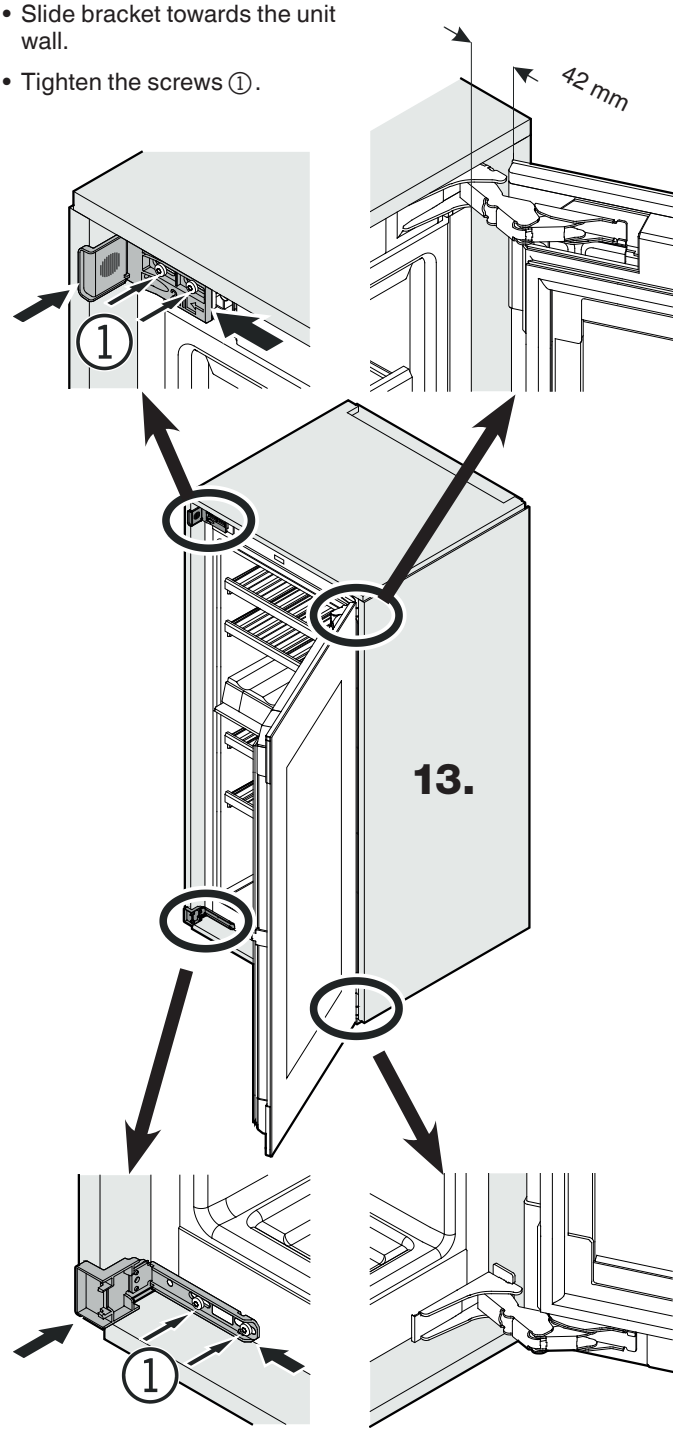

14. Adjust appliance via the adjustable feet, see section entitled "Adjusting the door", page 24.

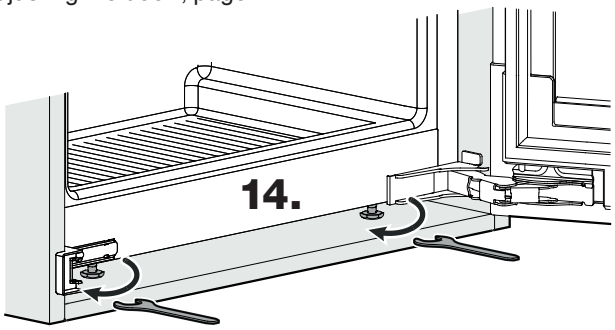

15. Secure the appliance to the kitchen unit using screws through the hinges and attachment brackets.

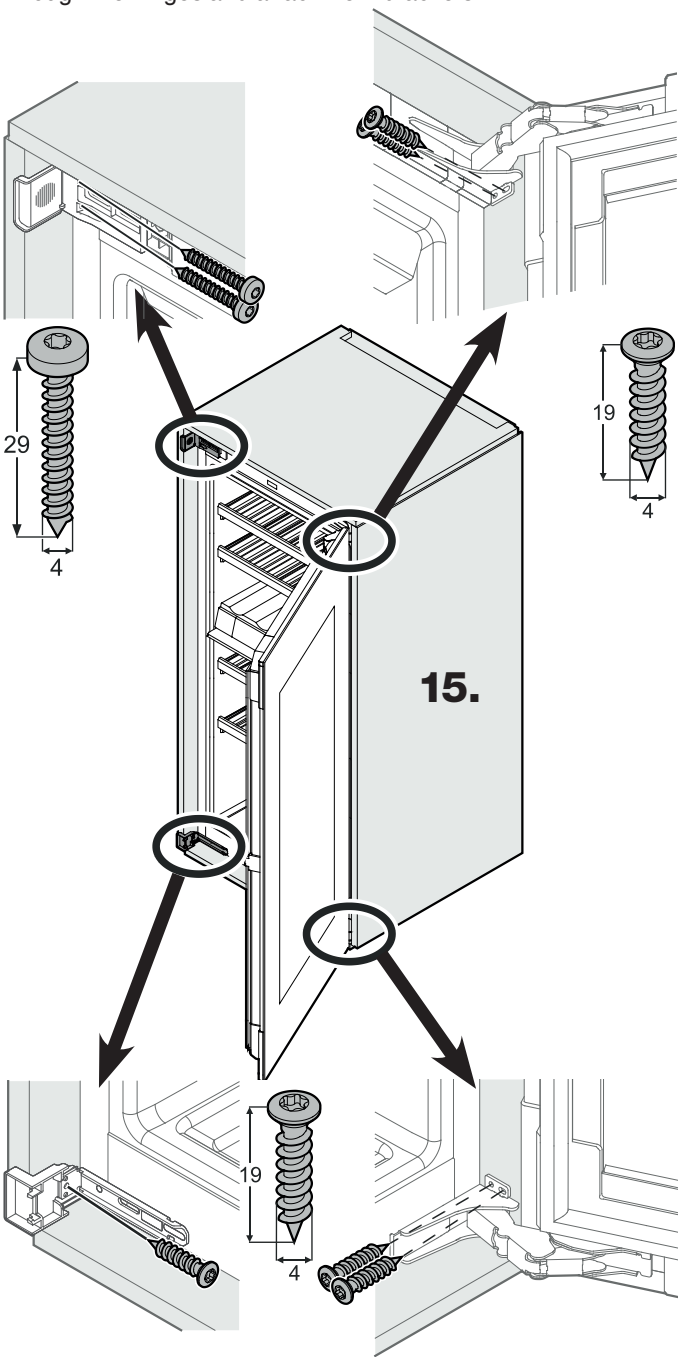

16. Snap off and remove the front part of the stop bracket.

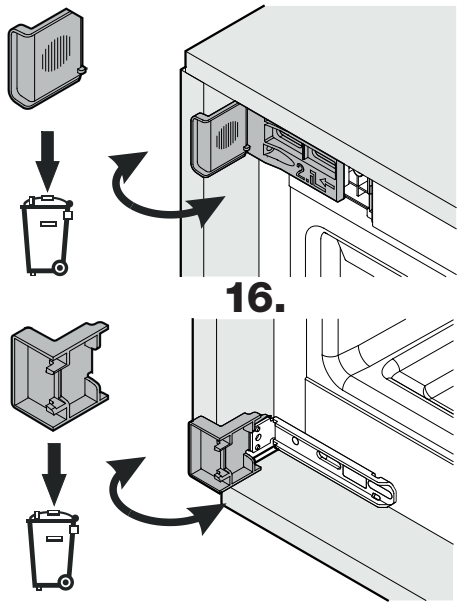

17. Fit the covers.

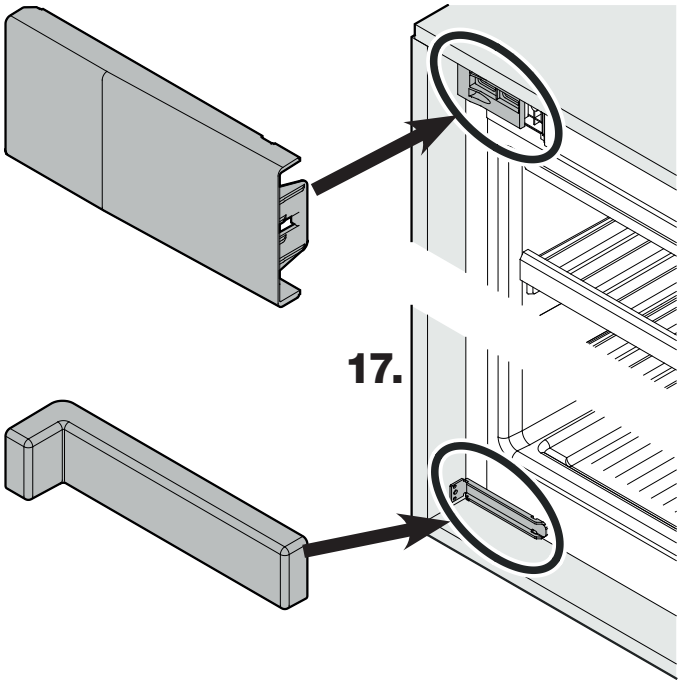

18. Stabilise the appliance at the back at the bottom:

Fit the handle ① to the stabilising rail ② and slide the stabilising rail into the floor of the appliance.

Remove the handle and repeat this procedure with the second stabilising rail.

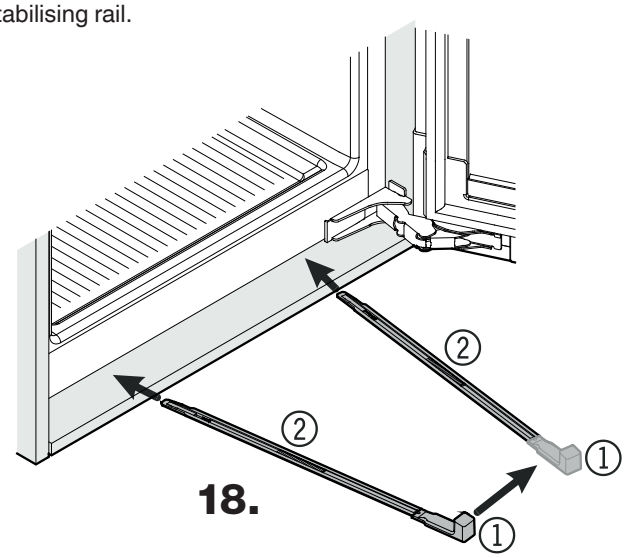

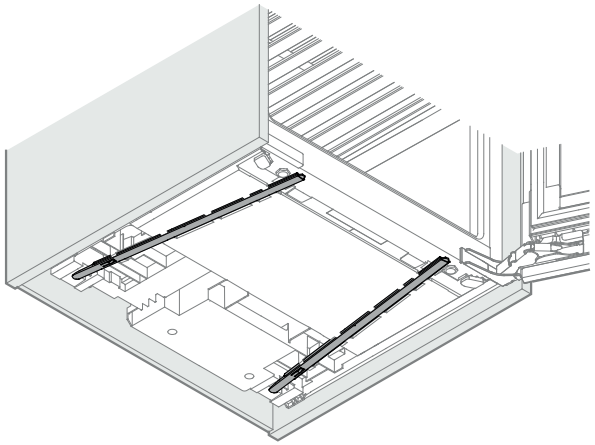

19. Remove seal.

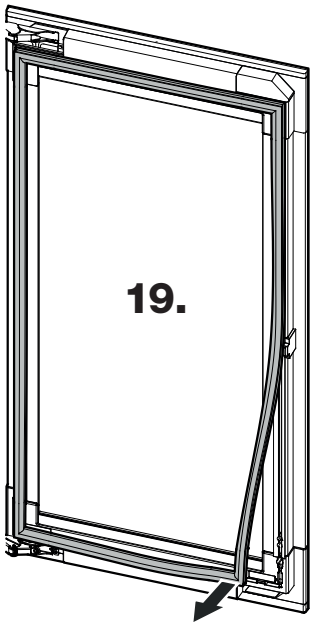

20. Remove cover.

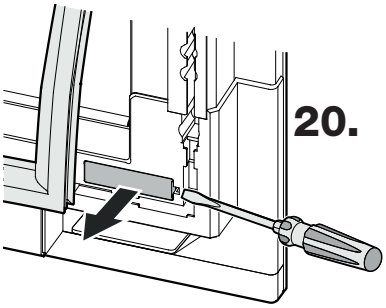

21. Remove the transportation safety component.

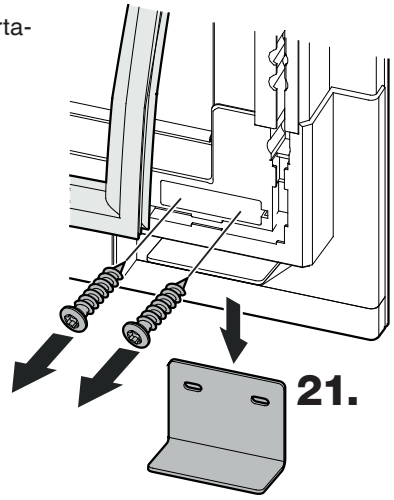

22. Screw on the cover.

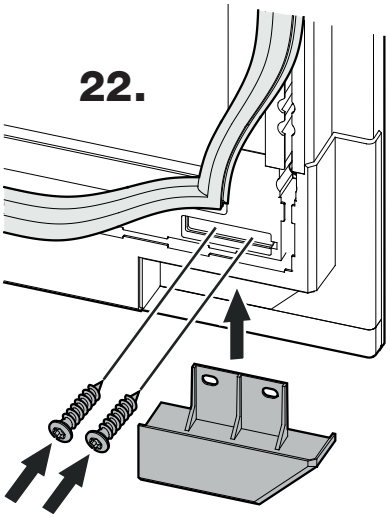

23. Fit cover.

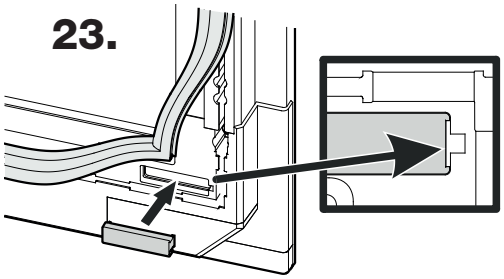

24. Fit seal.

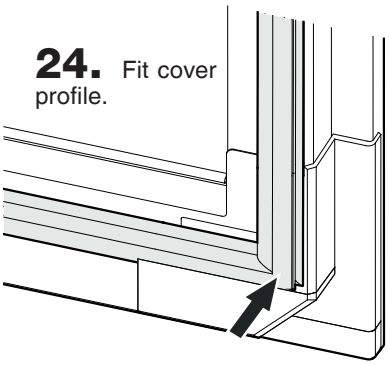

Check that the door is securely fitted to the appliance and closes properly.

Installation is now complete.

Adjusting the door

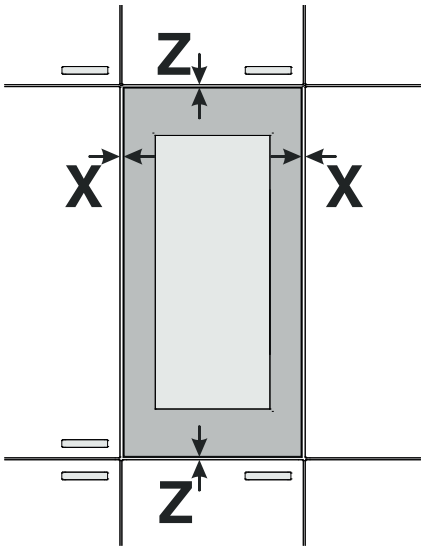

1. Remove seal.

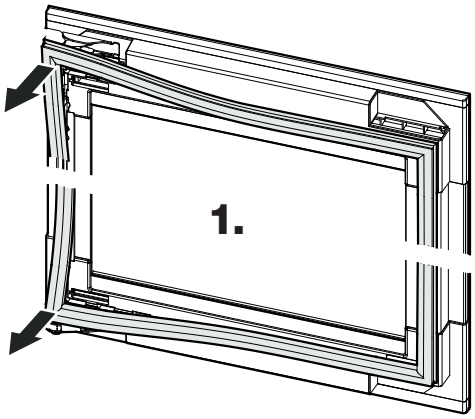

2. Remove covers.

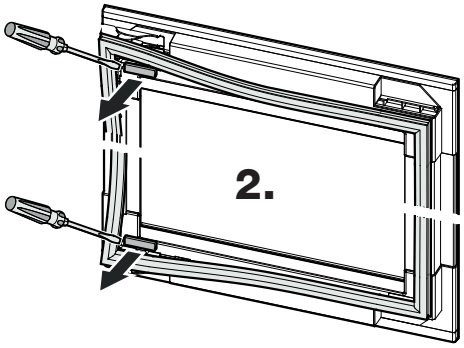

3.

- Remove screws ①.
- Transfer to position ②.
- Undo screws ③.
- Adjust clearance.
- Tighten screws ① and ③.

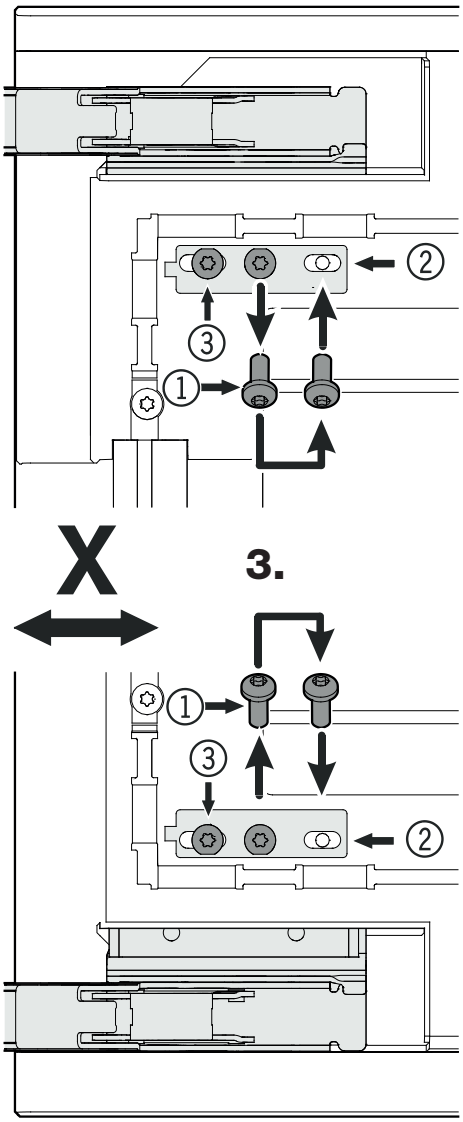

4. Fit the covers.

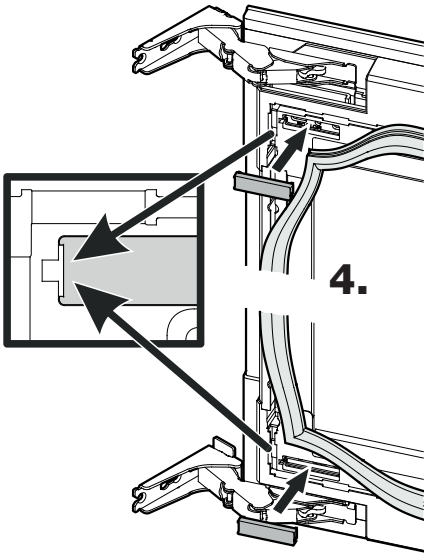

5. Fit seal.

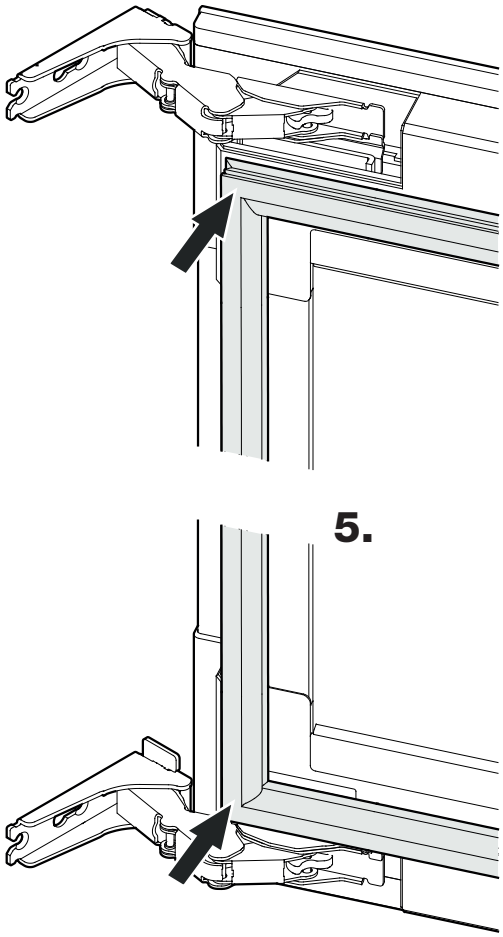

6. Adjust the clearance in Z direction.

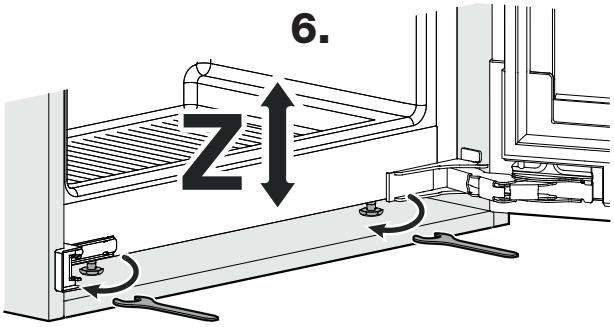

Liebherr Hausgeräte Lienz GmbH
Dr.-Hans-Liebherr-Strasse 1
A-9900 Lienz
Österreich
www.liebherr.com